ON-VEHICLE INSPECTION

1. INSPECT VOLTAGE INVERTER

HINT:
Remove interior parts so that the voltage inverter can be seen.

(a) Disconnect the voltage inverter connector.
(b) Measure the voltage according to the values in the table below.

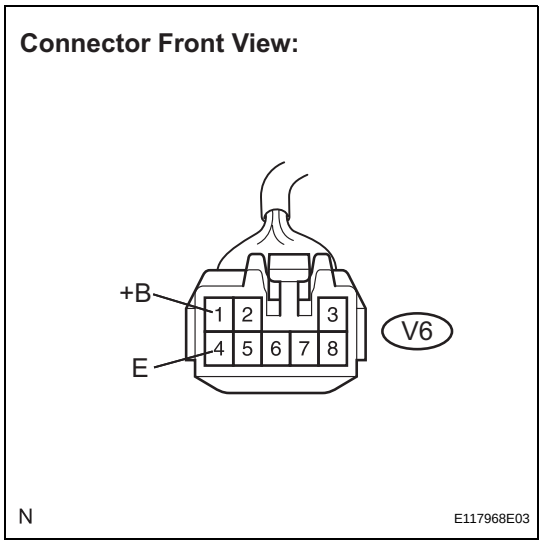

Input voltage

Tester connection	Condition	Specified condition
+B (V6-1) - E (V6-4)	Ignition switch ON	10 to 16 V
E (V6-4) - Body ground	Always	Below 1 V

If the result is not as specified, repair or replace harness or connector.

(c) Reconnect the voltage inverter connector.
(d) Measure the voltage according to the values in the table below.

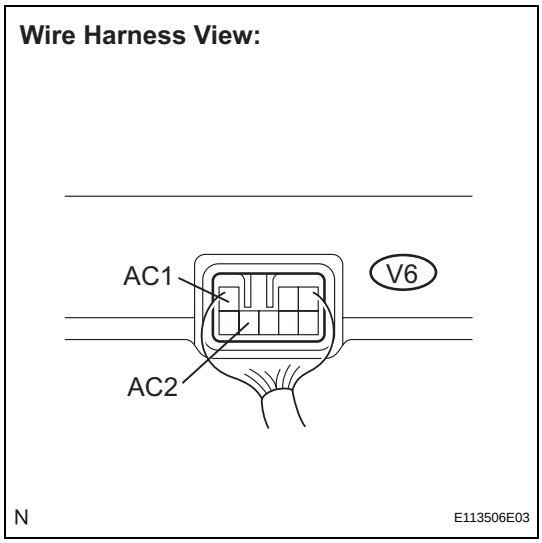

Output voltage

Tester connection	Condition	Specified condition
AC1 (V6-3) - AC2 (V6-7)	Ignition switch ON Main switch ON	AC 115 V

If the result is not as specified, replace the voltage inverter.

REMOVAL

1. **DISCONNECT CABLE FROM NEGATIVE BATTERY TERMINAL**

2. **REMOVE FRONT SEAT ASSEMBLY (for Driver Side)**
   HINT:
   (See page SE-2)

3. **REMOVE VOLTAGE INVERTER**
   (a) Remove the 2 bolts.
   (b) Fold the floor carpet to the inside.
   (c) Disconnect the connector.
   (d) Remove the voltage inverter.

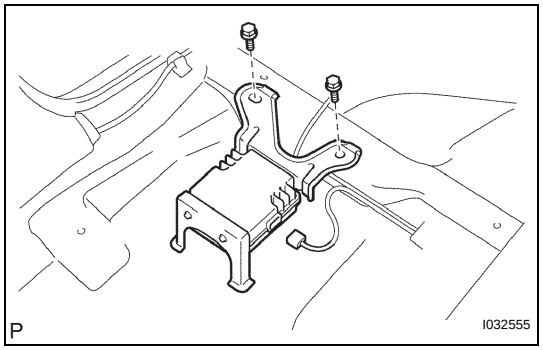

INSTALLATION

1. **INSTALL VOLTAGE INVERTER**
   (a) Install the voltage inverter.
   (b) Connect the connector.
   (c) Fold the floor carpet to the inside.
   (d) Tighten the 2 bolts.
   Torque: 7.0 N*m (71 kgf*cm, 62 in.*lbf)
   NOTICE:
   Tighten the bolts in following order shown in the illustration to install the voltage inverter.

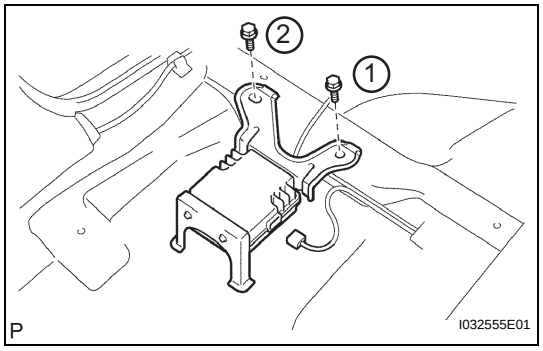

2. **INSTALL FRONT SEAT ASSEMBLY (for Driver Side)**
   HINT:
   (See page SE-2)

3. **CONNECT CABLE TO NEGATIVE BATTERY TERMINAL**

4. **PERFORM INITIALIZATION**